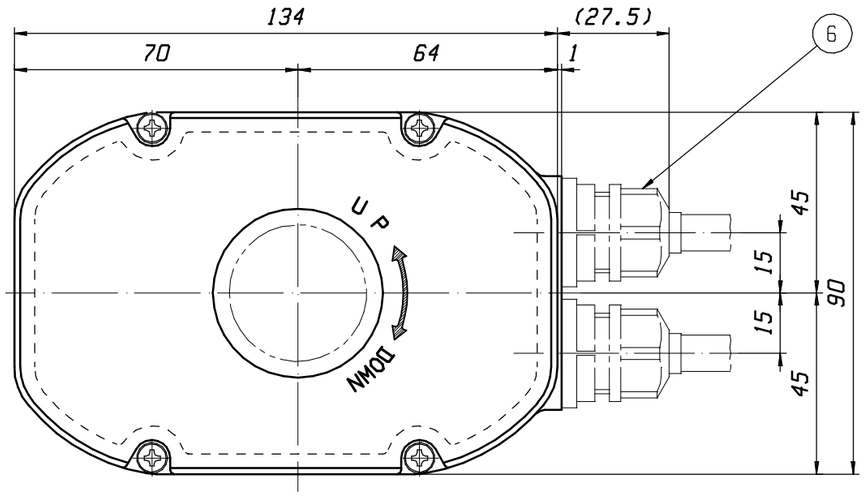

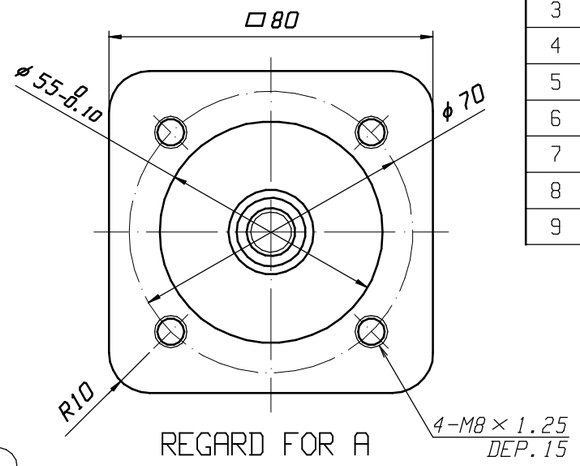

NO.	NAME OF PART	Q`TY	M T L	REMARKS
1	BODY BASE	1	ADC12	
2	BODY COVER	1	ADC12	
3	OUTPUT SHAFT	1	SUS303	
4	MANUAL HANDLE SHAFT	1	SUS303	
5	RUBBER CAP	1	NBR	
6	LEAD IN HOLE	2	OA-W16-11	OPTION
7	APERTOMETER	1	CLEAR RESIN	
8	BLIND PURAG	2	BLACK RESIN	
9	SPECIFICATION LABEL	1	TETORON	

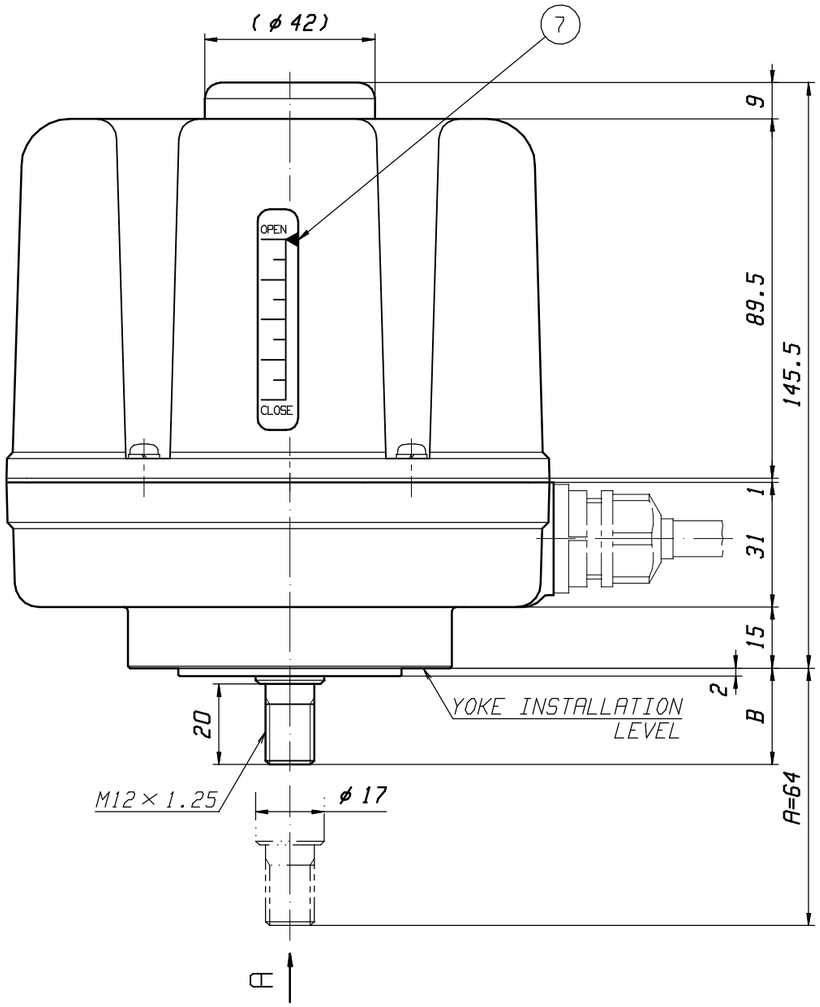

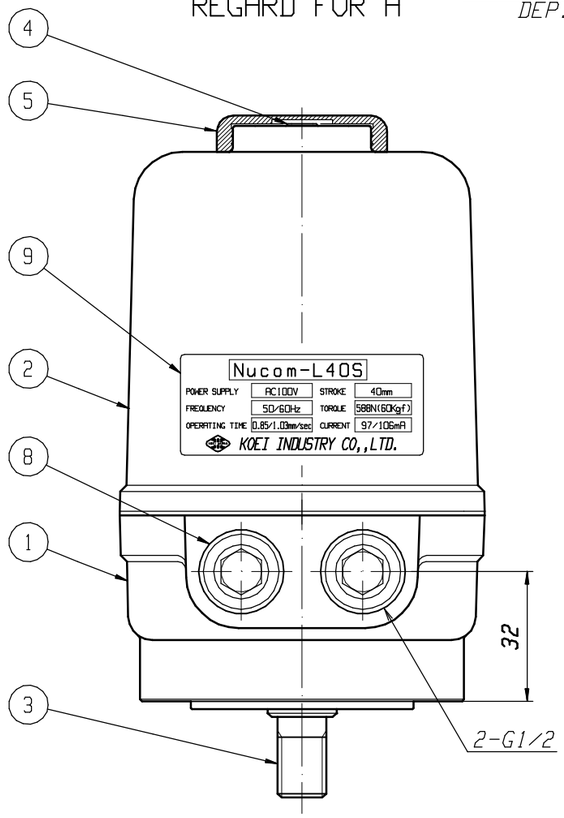

DRIVING UNIT SPECIFICATION	
POWER SOURCE	AC100V 50/60Hz
INPUT SIGNAL	4～20mA・DC
RESOLUTION	OVER 1/250
THRUST	588N(60Kgf)
STROKE	0～40mm(MAX)
OPERATION SPEED	0.86mm/sec
TORQUE LIMIT	BOTTOM
POSITION LIMIT	TOP
HUMIDITY	IP-65 SUITABLE
CONDITION FOR USE	-25～55° C
BODY MATERIAL	ADC 12
COATING COLOR	GRAY(MANSEL N-6)
BODY WEIGHT	2.0Kg

STANDARD STROKE		
A BOTTOM	B TOP	STROKE
64 mm	24 mm	40 mm

		DATE	SIGN
NAME: ACTUATOR OUTER DIMENSIONS	APRV.	Susumu Yamaguchi	電子署名者：Susumu Yamaguchi DN: cn=Susumu Yamaguchi, o=Koei Industry Co.Ltd. Reason: I am the author of this document Date: 2002.09.05 14:00:53 +09'00'
MODEL: Nucom-L40S	CONF.	電子証明書は有効ではありません。	電子署名者：公文書の改竄検知：改竄 改竄 改竄
	DRAW.	05, SEP, '02	H. OGAWA
KOEI INDUSTRY CO., LTD.	DR. No,	2H110G07	